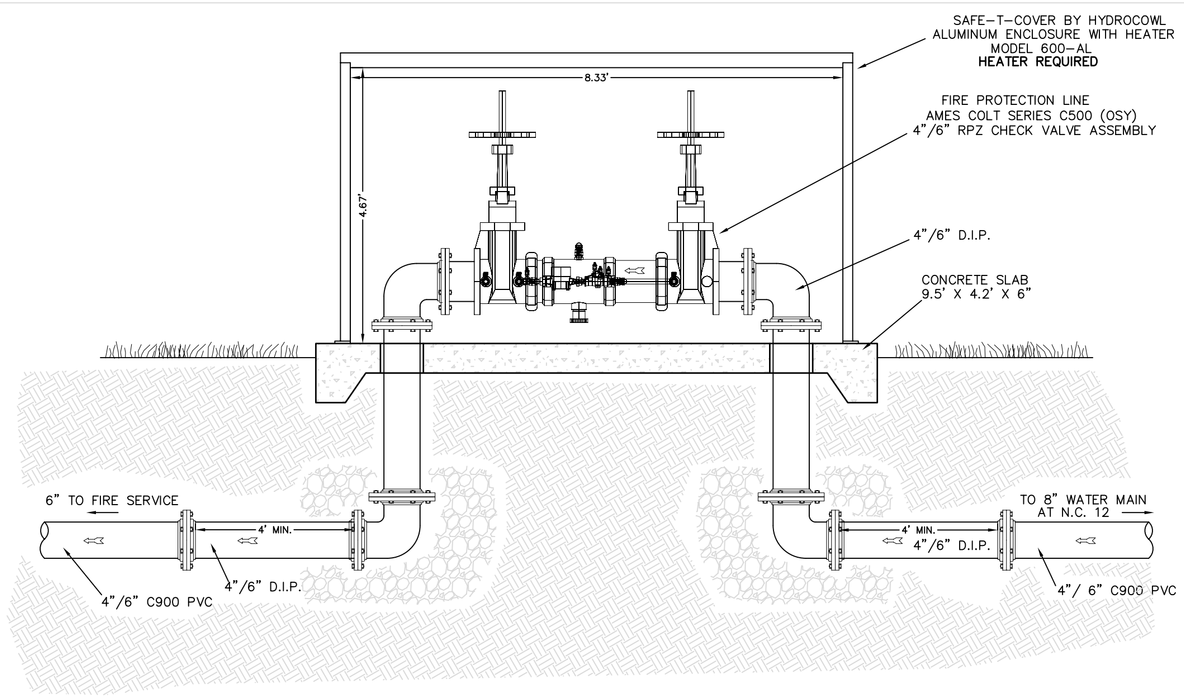

4" and 6" BACK FLOW PREVENTION
NOT TO SCALE

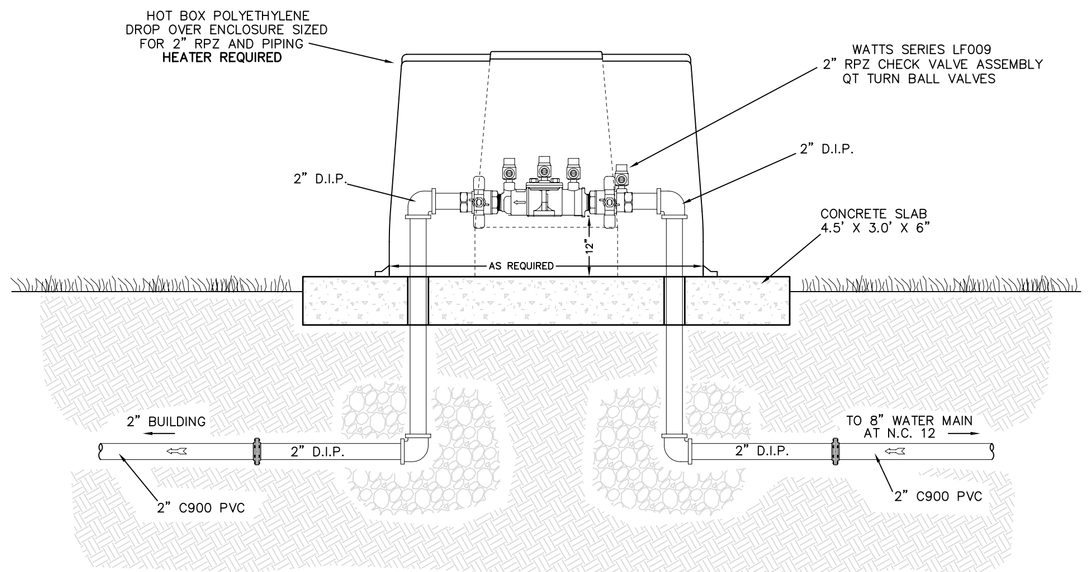

2" BACK FLOW PREVENTION
NOT TO SCALE

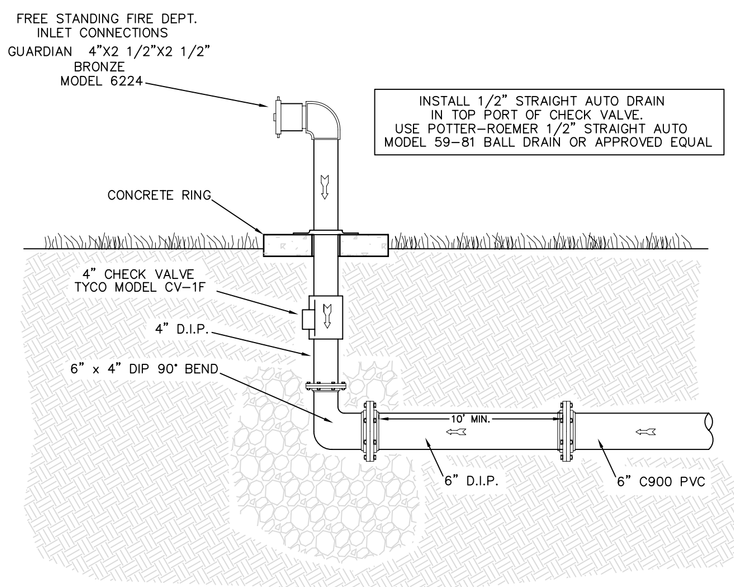

FIRE DEPARTMENT CONNECTION
NOT TO SCALE

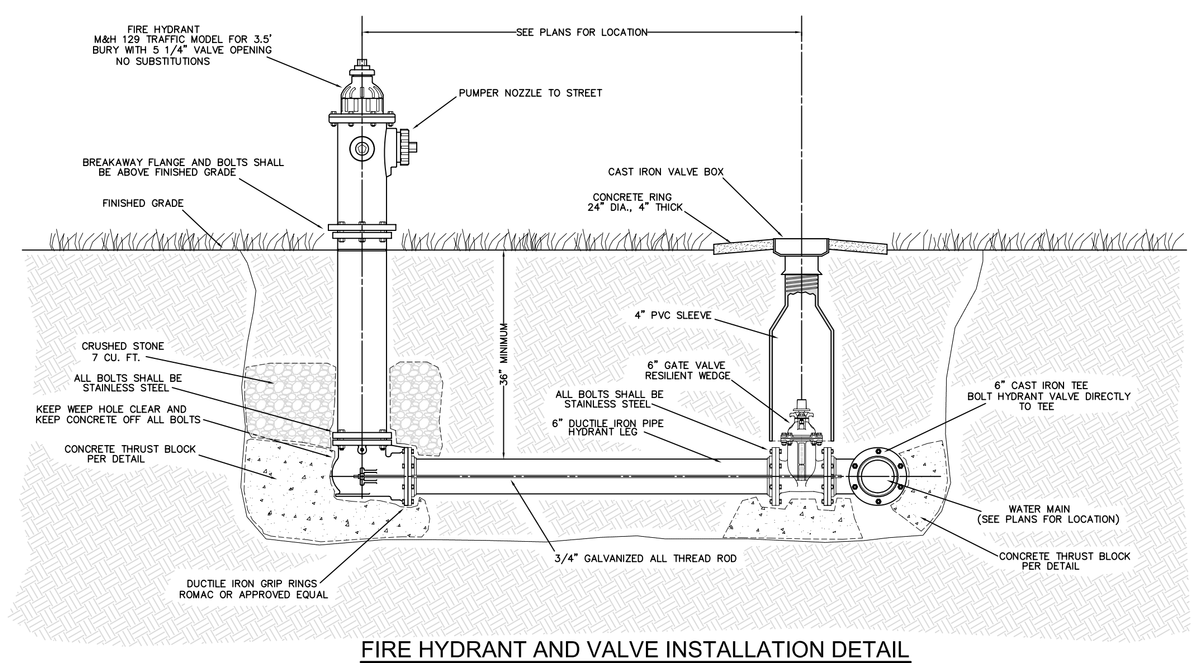

FIRE HYDRANT AND VALVE INSTALLATION DETAIL
NOT TO SCALE

PAINTING REQUIREMENTS FOR NEW FIRE HYDRANTS

WATERLINE DIAMETER	BONNETT	BODY
6"	YELLOW	RED
8"	ORANGE	RED
10" AND LARGER	GREEN	RED

NOTE: RED BODY MUST BE REPAINTED BY CONTRACTOR
PAINT WITH RUSTOLEUM ENAMEL "SAFETY YELLOW", "SAFETY ORANGE" "SAFETY GREEN" AND "SAFETY RED"

NOTES:
1. DO NOT BLOCK HYDRANT DRAIN WITH THRUST BLOCKING
2. COAT TIE RODS AND NUTS WITH EPOXY
3. DO NOT SUPPORT VALVE BOX DIRECTLY ON VALVE
4. ALL JOINTS SHALL BE MECHANICAL JOINTS
5. INSTALL RELFECTIVE HYDRANT MARKER, STIMPSONITE MODEL 88AB, TWO WAY REFLECTOR IN CENTERLINE OF PAVEMENT PERPENDICULAR TO HYDRANT LOCATION USING E-BOND EPOXY ADHESIVE 1240/1241 PER MANUFACTURERS SPECIFICATIONS.

ES-A-C500/C500N/C500Z

Colt™ Series C500, C500N, C500Z

AMES FIRE & WATERMASTER

Reduced Pressure Detector Assemblies
Sizes: 2½" – 10" (65 – 250mm)

Features
- Extremely Compact Design
- 70% Lighter than Traditional Designs
- 304 (Schedule 40) Stainless Steel Housing & Sleeve
- Groove Fittings Allow Integral Pipeline Adjustment
- Patented Link Check Provides Lowest Pressure Loss
- Unmatched Ease of Serviceability
- Replaceable Check Disc Rubber
- Available with Grooved Butterfly Valve Shutoffs
- Bottom Mounted Cast Stainless Steel Relief Valve
- Metered Bypass to Detect Leakage or Theft of Water from the Fire Sprinkler System

The Colt C500, C500N, C500Z Reduced Pressure Detector Assemblies are designed to protect drinking water supplies from dangerous cross-connections in accordance with national plumbing codes and water authority requirements for health-hazard non-potable service applications such as irrigation, fire line, or industrial processing. The Colt C500, C500N, C500Z are used to monitor unauthorized use of water from the fire protection system.

Specifications
The Colt C500, C500N, C500Z Reduced Pressure Detector Assemblies shall consist of two independent Link Check modules, a differential pressure relief valve located between and below the two modules, two drip tight shutoff valves, and required test cocks. Link Check modules and relief valve shall be contained within a sleeve accessible single housing constructed from 304 (Schedule 40) stainless steel pipe with groove end connections. Link Checks shall have reversible elastomer discs and in operation produce drip tight closure against the reverse flow of liquid caused by backpressure or backsiphonage. The bypass assembly consists of a meter registering either gallon or cubic measurements, a reduced pressure zone assembly and required test cocks. Assembly shall be Colt C500, C500N, C500Z as manufactured by the Ames Company.

WARNING
It is illegal to use this product in any plumbing system providing water for human consumption, such as drinking or dishwashing, in the United States. Before installing standard material product, contact your local water authority, building and plumbing codes.

NOTICE
The information contained herein is not intended to replace the full product installation and safety information available or the experience of a trained product installer. You are required to thoroughly read all installation instructions and product safety information before beginning the installation of this product.

Job Name _____ Contractor _____
Job Location _____ Approval _____
Engineer _____ Contractor's P.O. No. _____
Approval _____ Representative _____

Ames Fire & Waterworks product specifications in U.S. customary units and metric are approximate and are provided for reference only. For precise measurements, please contact Ames Fire & Waterworks Technical Service. Ames Fire & Waterworks reserves the right to change or modify product design, construction, specifications, or materials without prior notice and without incurring any obligation to make such changes and modifications on Ames Fire & Waterworks products previously or subsequently sold.

AMES COLT SERIES C500 REDUCED PRESSURE DETECTOR ASSEMBLY
6" HORIZONTAL OSY

Configurations
- Horizontal
- "Z" pattern horizontal
- "N" pattern horizontal

Materials
- Housing & Sleeve: 304 (Schedule 40) Stainless Steel
- Elastomers: EPDM, Silicone and Buna 'N'
- Link Checks: Noryl®, Stainless Steel
- Check Discs: Reversible Silicone or EPDM
- Test Cocks: Bronze Body Nickel Plated
- Pins & Fasteners: 300 Series Stainless Steel
- Springs: Stainless Steel

Pressure — Temperature
Temperature Range: 33°F – 140°F (0.5°C – 60°C)
Maximum Working Pressure: 175psi (12.1 bar)

Dimensions — Weights

Available Models
Suffix:
OSY - UL/FM outside stem and yoke resilient seated gate valves
BFG - UL/FM grooved gear operated butterfly valves w/tamper switch
*OSY FxG - Flanged inlet gate connection and grooved outlet gate connection
*OSY GxF - Grooved inlet gate connection and flanged outlet gate connection
*OSY GxG - Grooved inlet gate connection and grooved outlet gate connection
Available with grooved NRS gate valves - consult factory*
Post indicator plate and operating nut available - consult factory*
*Consult factory for dimensions.

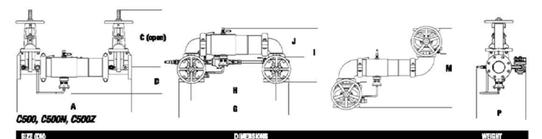

C500, C500N, C500Z

SIZE (IN)	A		C (OPEN)		B		E		D		I		J		M		F		WEIGHT (APPROX.)		C500N	
in.	mm	in.	mm	in.	mm	in.	mm	in.	mm	in.	mm	in.	mm	in.	mm	in.	mm	in.	mm	lbs.	kgs.	lbs.	kgs.
2½	65	30¾	781	18¾	476	6¼	165	25¼	728	21⅞	546	13⅛	333	17¼	438	9¾	253	23	584	140	388	176	79
3	80	31⅞	808	19⅜	473	6⅞	173	30⅞	784	22⅞	580	17⅛	435	9¾	253	23	584	140	388	152	71	173	79
4	100	39¾	967	22⅞	573	7	178	33	838	23¼	597	18¼	470	11¾	292	28¼	667	19¾	388	178	81	201	91
6	150	45¼	1.195	30¼	765	8¼	210	44¾	1.137	33¼	845	25¾	654	13¾	349	30¼	768	19	483	312	142	363	165
8	200	49¾	1264	37¾	958	9¾	248	54¾	1391	40¾	1018	27¾	687	15¾	396	36¼	927	23¾	538	467	225	572	259
10																						427	

C9

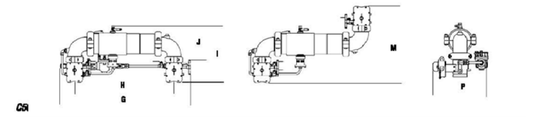

SIZE (IN)	C		B		E		I		J		M		F		WEIGHT (APPROX.)	
in.	mm	in.	mm	in.	mm	in.	mm	in.	mm	in.	mm	in.	mm	in.	mm	lbs.	kgs.
2½	65	32¼	820	23	584	15½	394	6¼	241	19¾	502	10¾	492	31	787	31	37
3	80	34	864	24	610	18¾	414	10¾	292	21¾	540	10¾	419	34	864	38	38
4	100	38¾	990	29½	648	17¾	437	12¾	279	28¾	697	19¾	422	51	1.143	53	53.8
6	150	46¼	1181	36¼	895	20¾	521	18¼	343	27¾	692	19	483	174	79		

Noryl® is a registered trademark of SABIC Innovative Plastics™.

ES-LF009

For Health Hazard Applications

Job Name _____ Contractor _____
Job Location _____ Approval _____
Engineer _____ Contractor's P.O. No. _____
Approval _____ Representative _____

LEAD FREE

Series LF009
Reduced Pressure Zone Assemblies

Sizes: ¼" – 3" (8 – 80mm)

Series LF009 Reduced Pressure Zone Assemblies are designed to protect potable water supplies in accordance with national plumbing codes and water authority requirements. This series can be used in a variety of installations, including the prevention of health hazard cross-connections in piping systems or for containment at the service line entrance.The LF009 features Lead Free* construction to comply with Lead Free* installation requirements

This series features two in-line, independent check valves, captured springs for maintenance safety, and a differential pressure relief valve. Its compact modular design facilitates easy maintenance and assembly access. Sizes ½" – 1" (8 – 25mm) shutoffs have two handles.

Features
- Single access cover and modular check construction for ease of maintenance
- Top entry – all internals immediately accessible
- Captured springs for safe maintenance
- Internal relief valve for reduced installation clearances
- Replaceable seats for economical repair
- Lead Free* cast copper silicon alloy body construction for durability ¼" – 2" (8 – 50mm)
- Fused epoxy coated cast iron body 2½" and 3" (65 and 80mm)
- Ball valve test cocks — screwdriver slotted ¼" – 2" (8 – 50mm)
- Large body passages provides low pressure drop
- Compact, space saving design
- No special tools required for servicing

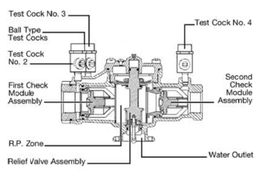

Specifications
A Reduced Pressure Zone Assembly shall be installed at each potential health hazard location to prevent backflow due to backsiphonage and/or backpressure. The assembly shall consist of an internal pressure differential relief valve located in a zone between two positive seating check modules with captured springs and silicone seat discs. Check and relief valve shall be accessible by removal of a single access cover on the valve. There shall be no threads or screws in the waterway exposed to line fluids. Service of all internal components shall be through a single access cover secured with stainless steel bolts. Body and shutoffs shall be constructed using Lead Free* cast copper silicon alloy materials. Lead Free* complies with current plumbing codes, water quality standards, where applicable, requiring reduced lead content.

The assembly shall also include two resilient seated isolation valves, four resilient seated test cocks and an air gap chain fitting. The assembly shall meet the requirements of: USC, ASSE Std. 1013; AWWA Std. C511; CSA B64.4. Shall be a Watts Series LF009.

Now Available
WattsBox Insulated Enclosures.
For more information, send for literature ES-WB.

NOTICE
Inquire with governing authorities for local installation requirements

NOTICE
The information contained herein is not intended to replace the full product installation and safety information available or the experience of a trained product installer. You are required to thoroughly read all installation instructions and product safety information before beginning the installation of this product.

*The wetted surface of this product contacted by consumable water contains less than 0.25% of lead by weight.

Watts product specifications in U.S. customary units and metric are approximate and are provided for reference only. For precise measurements, please contact Watts Technical Service. Watts reserves the right to change or modify product design, construction, specifications, or materials without prior notice and without incurring any obligation to make such changes and modifications on Watts products previously or subsequently sold.

WATTS

Dimensions and Weight: ¼" – 2" (8 – 50mm) LF009

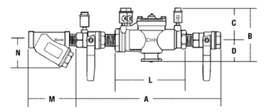

LF009 ¼" – 2"

SIZE (IN)	A		B		C		D		E		L		M		N		WEIGHT:
in.	mm	in.	mm	in.	mm	in.	mm	in.	mm	in.	mm	in.	mm	in.	mm	lbs.	kgs.
¼	8	10	250	4¾	117	3⅛	86	1¼	32	5¼	140	2½	63	2⅛	54	5	2
⅜	10	10	250	4¾	117	3⅛	86	1¼	32	5¼	140	2½	63	2⅛	54	5	2
½	15	10	250	4¾	117	3⅛	86	1¼	32	5¼	140	2½	63	2⅛	54	5	2
¾	20	10¾	273	5	127	3½	89	1½	38	6¾	171	3¼	81	2¾	70	6	3
1	25	14¼	362	5¼	140	3	76	2¼	64	9¼	241	3¾	95	3	76	12	5
1¼	32	17¾	451	6	152	3¾	89	2½	64	11¼	289	4¼	110	3¾	89	19	8
1½	40	17¾	454	6	152	3¾	89	2½	64	11¼	289	4¼	110	4	102	19	8
2	50	21¼	540	7¼	187	4¾	114	2¾	83	13¾	349	5¼	137	5	127	36	13

Dimensions and Weight: 2½" and 3" (65 and 80mm) LF009

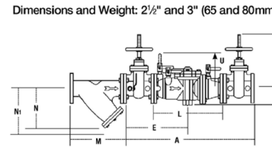

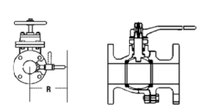

Watts G-4000 Series
QT - Ball Valves

STRAINER SIZE	DIMENSIONS (APPROX.)						WEIGHT	
	N		M					
in.	mm	in.	mm	in.	mm	in.	mm	lbs.	kgs.
2½	65	10	254	6½	165	9½	240	28	13.7
3	80	10½	267	7	178	10	254	34	15.4

†Clearance for servicing

MODEL	SIZE (IN)		A		C		B		E		L		B		F		WEIGHT:	
	in.	mm	in.	mm	in.	mm	in.	mm	in.	mm	in.	mm	in.	mm	in.	mm	lbs.	kgs.
LF009	¾	65	—	—	—	—	4½	114	—	—	18¼	463	—	—	16½	420	79	34.5
LF009ZS	¾	65	22½	546	15¼	403	4½	114	18¼	416	18¼	463	7¾	197	16½	420	108	79.3
LF009NS	¾	65	22½	546	15¼	403	4½	114	18¼	416	18¼	463	7¾	197	16½	420	110	69.9
LF009NSUA	¾	65	22½	546	6	152	4½	114	18¼	416	18¼	463	7¾	197	16½	420	110	69.9
LF009J	1	80	—	—	—	—	4½	114	—	—	18¼	463	—	—	18½	470	79	34.5
LF009ZS	1	80	24¼	615	18¼	470	4½	114	18¼	420	18¼	463	8¼	222	18½	470	198	89.8
LF009NS	1	80	24¼	615	17¾	324	4½	114	18¼	420	18¼	463	8¼	222	18½	470	131	59.6
LF009ZSUA	1	80	24¼	615	7	178	4½	114	18¼	420	18¼	463	8¼	222	18½	470	158	71.7

2" WATTS SERIES LF009 REDUCD PRESSURE ASSEMBLY

MICHAEL W. ROBINSON, P.E., P.L.S.
ENGINEERING AND SURVEYING
P.O. BOX 2852
KILL DEVIL HILLS, NC 27948
PHONE: 252-255-8026
EMAIL: mrobinson@obxengineering.com

NOT FOR CONSTRUCTION
PRELIMINARY

NORTH CAROLINA PROFESSIONAL ENGINEER SEAL 18994 MICHAEL W. ROBINSON

REVISIONS

NO.	DATE	DESCRIPTION	BY

PROJECT:
FIRST FLIGHT HOTEL, LLC
KILL DEVIL HILLS NORTH CAROLINA DARE COUNTY

DETAIL SHEET 3

DATE: 10-24-16	SCALE: NONE
DESIGNED: MWR	DRAWN: MWR
SHEET: 7 OF 8	
CAD FILE:	
PROJECT NO: 052916	