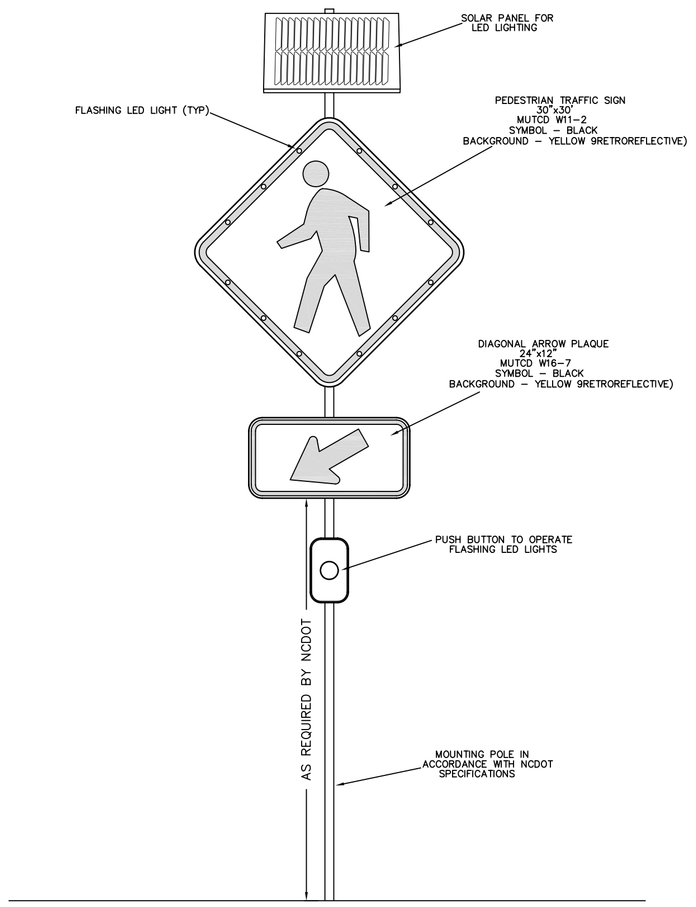

PEDESTRIAN CROSSING SIGN WITH LED LIGHTING

NOT TO SCALE

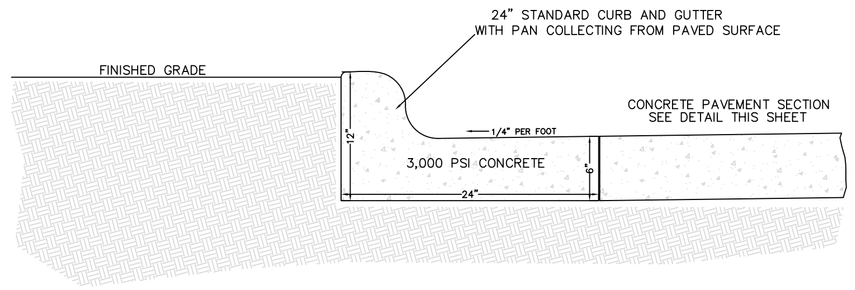

CONTRACTION JOINTS SHALL BE PLACED AT 10' INTERVALS.
ALL CONTRACTION JOINTS SHALL BE FILLED WITH JOINT FILLER AND SEALER.

CURB AND GUTTER PAVING SECTION

NOT TO SCALE

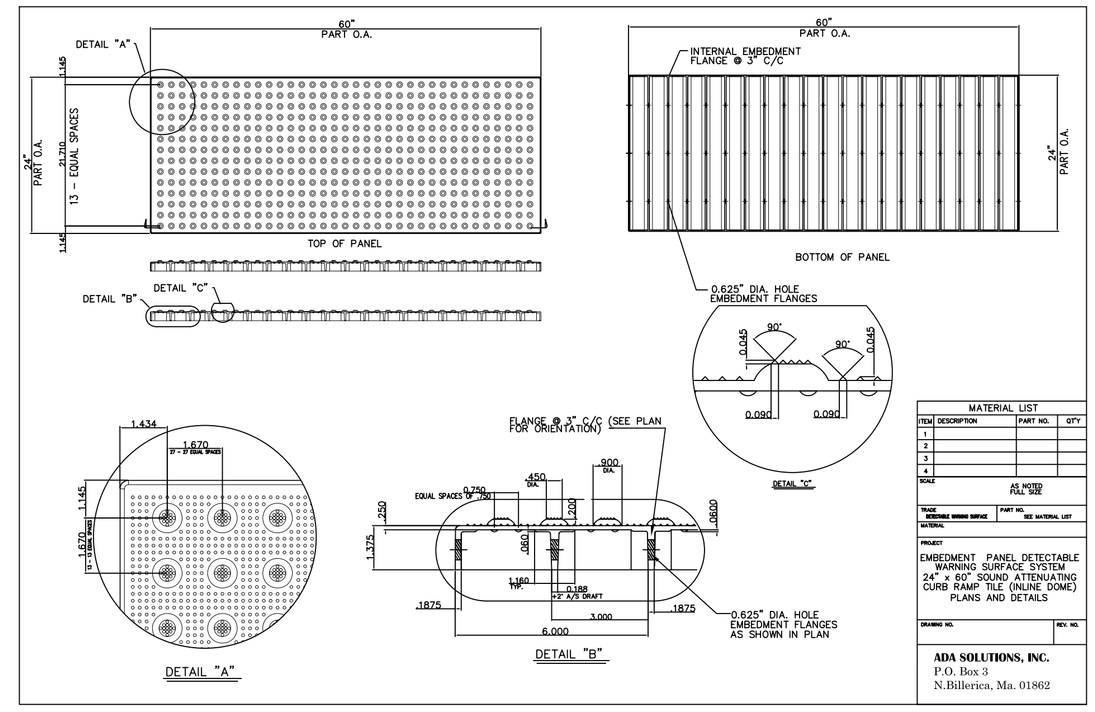

DETECTABLE PAVER PANELS - ADA SOLUTIONS, INC. or EQUAL

NOT TO SCALE

KILL DEVIL HILLS VALVE AND VALVE BOX STANDARDS

Section A.1.Valves.

(a) Resilient wedge gate valves. All resilient wedge gate valves shall conform in all respects to latest AWWA Specification C500 and shall be American Flow Control, Mueller "O" ring or M&H, or approved equal. Resilient wedge gate valves shall be vertical, shall open counterclockwise, and shall be of the non-rising stem type with mechanical joint ends and two (2) inch square operating nut. Resilient wedge valves shall be iron body, double disc, parallel seat, fully bronze mounted. Resilient wedge valves shall be designed for a working pressure of two hundred (200) psi

(c) Valve boxes. Valve boxes shall have the following characteristics:
(1) Valve boxes shall be of close-grained, gray cast iron, in three (3) pieces consisting of

(a) a lower base piece which shall be flanged at the bottom to fit around the stuffing gland and rest on the valve bonnet.

(b) an upper part which shall also be flanged on the lower end, of such size so as to telescope over the lower part and the upper end being constructed in the form of a socket to receive the cover.

(c) The centerpiece shall be minimum five (5) inches inside diameter.
(2) The valve box shall be Dewey Brothers, Inc., VBX-TE-3B or approved equal.
(3) The cover shall have cast on the upper surface in raised letters the word "WATER." Valve boxes shall be painted prior to shipment with a coat of protective asphaltum paint and contain a cement collar.

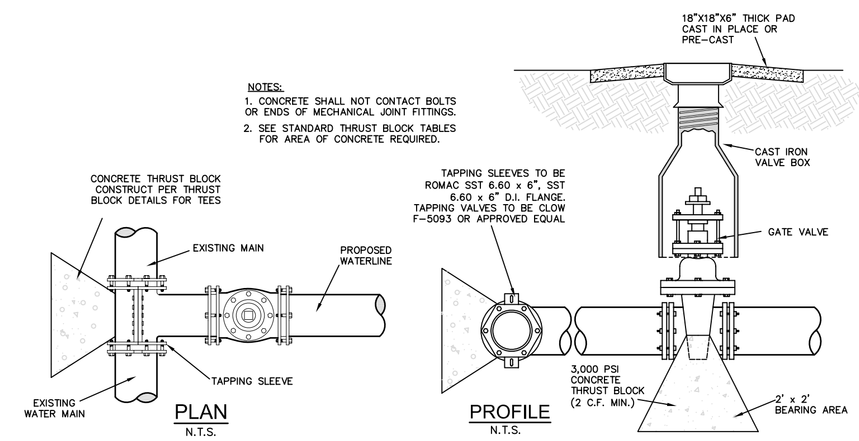

TAPPING SLEEVE DETAIL

NOT TO SCALE

KILL DEVIL HILLS TESTING STANDARDS

TEST AND CLEANUP

Section A.1.Testing and inspections.

(a) The Town shall monitor all testing and inspect all lines as construction progresses. All testing shall be completed before connecting to existing water lines. The Contractor or developer shall notify the Town twenty-four (24) hours in advance when he/she will be ready for inspection and testing and shall pretest before notifying the Town.

(b) After the pipe has been laid and backfilled as specified, all newly laid pipe, or any valve section thereof; shall be subjected to a pressure of not less than one hundred fifty (150) psi. Air or air-water methods of applying pressure are prohibited. The duration of the pressure test shall be at least four (4) hours, for which time the Contractor shall fill the line slowly, expelling air at the high points, and bring it up to required pressure.

(c) The only lines not required to be pressure tested are short (not longer than 25' unless approved by the Engineer) connection sections used to tie new mains into existing lines.

(d) The Town shall inspect the entire line and appurtenances for leaks and movement. Any leaks or defects shall be repaired and the test repeated until acceptable.

(e) A leakage test shall be conducted after a pressure test has been satisfactorily completed. The average pressure range shall be one hundred fifty (150) psi and be held for four (4) hours, provided that the Engineer may, at his discretion, allow this time to be reduced to (2) hours. The lines shall be filled as for the pressure test or the Contractor shall continue to maintain the pressure from the test. A source of makeup water shall be provided that can be measured. The test will be made to determine the leakage, or the amount of water required to maintain test pressure.

(f) The allowable leakage is less than the value computed by the formula:

$$L = \frac{SD\sqrt{P}}{133{,}200}$$

S = LENGTH OF PIPE (FEET)
L = LEAKAGE (GPH)
D = NOMINAL DIAMETER OF PIPE SEGMENT TESTED (INCHES)
P = TEST PRESSURE (POUNDS PER SQUARE INCH)

Should any test of pipe disclose leakage greater than that specified above, the Contractor shall locate and repair defective joints until the leakage is within the specified allowance.

(g) The Contractor shall maintain pressure on the line and close each valve progressively, starting from the far end of the system and vent extreme ends of the line. Allowable pressure drop shall be less than ten (10) psi in five (5) minutes with test pump off

Ford Stainless Steel Tapping Sleeve

Style FAST Tapping Sleeve, 360° Gasket, Stainless Steel, Carbon Steel Flange or Mechanical Joint Adapter Outlet

Ford FAST Tapping Sleeves take the guesswork out of large pipe taps. A gridded gasket surrounds the pipe and not only cushions the pipe during the tap, but also helps prevent pipe breaks. The flange outlet is welded inside and out.

The sleeve is constructed of Grade 18-8 type 304 stainless steel to provide corrosion protection. Sleeves are available in pipe sizes 3" through 24", with outlets from 3" through 12". Detailed specifications and critical dimensions are outlined below.

Specifications

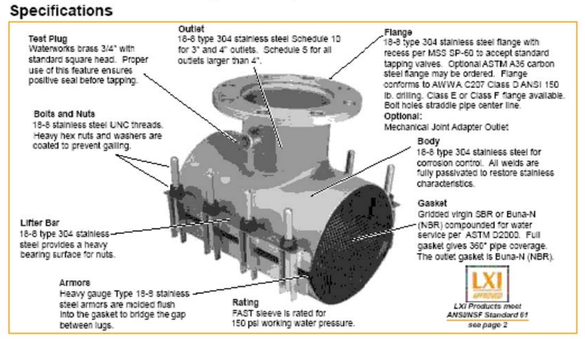

FAST Dimensions

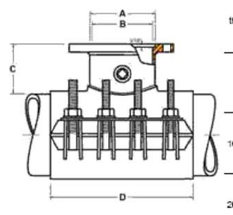

Nom. Pipe Size	C207 * Class D Flange Size	A	B	C	D	Stup Size	No. of Stups	Design Style
3"	3"	4-1/32"	3-1/4"	4-15/16"	15°	5/8"	8	2 pc.
	3"	4-1/32"	3-1/4"	4-15/16"	15°	5/8"	8	2 pc.
4" through 12"	4"	5-1/32"	4-1/4"	4-15/16"	15°	5/8"	8	2 pc.
	6"	7-1/32"	6-3/8"	5-1/4"	15°	3/4"	8	2 pc.
	8"	9-1/32"	8-3/8"	5-3/8"	22°	3/4"	12	2 pc.
	10"	11-1/32"	10-3/16"	5-7/8"	22°	3/4"	12	2 pc.
	12"	13-1/32"	12-3/16"	6"	24°	3/4"	12	2 pc.
14"	3"	4-1/32"	3-1/4"	4-15/16"	15°	3/4"	10	2 pc.
	4"	5-1/32"	4-1/4"	4-15/16"	15°	3/4"	10	2 pc.
	6"	7-1/32"	6-3/8"	5-1/4"	15°	3/4"	10	2 pc.
	8"	9-1/32"	8-3/8"	5-3/8"	22°	3/4"	12	2 pc.
	10"	11-1/32"	10-3/16"	5-7/8"	22°	3/4"	12	2 pc.
	12"	13-1/32"	12-3/16"	6"	24°	3/4"	12	2 pc.
16" - 18"	3"	4-1/32"	3-1/4"	4-15/16"	15°	5/8"	15	3 pc.
	4"	5-1/32"	4-1/4"	4-15/16"	15°	5/8"	15	3 pc.
	6"	7-1/32"	6-3/8"	5-1/4"	15°	5/8"	15	3 pc.
	8"	9-1/32"	8-3/8"	5-3/8"	22°	5/8"	18	3 pc.
	10"	11-1/32"	10-3/16"	5-7/8"	22°	3/4"	18	3 pc.
	12"	13-1/32"	12-3/16"	6"	24°	3/4"	21	3 pc.
20" - 24"	3"	4-1/32"	3-1/4"	4-15/16"	15°	3/4"	15	3 pc.
	4"	5-1/32"	4-1/4"	4-15/16"	15°	3/4"	15	3 pc.
	6"	7-1/32"	6-3/8"	5-1/4"	15°	3/4"	15	3 pc.
	8"	9-1/32"	8-3/8"	5-3/8"	22°	3/4"	18	3 pc.
	10"	11-1/32"	10-3/16"	5-7/8"	22°	3/4"	18	3 pc.
	12"	13-1/32"	12-3/16"	6"	24°	3/4"	21	3 pc.

Outlet Options: *Class E or Class F flange available, contact factory
4" - 12" MJ adapter outlets available, contact factory for dimensions.

AA-6

STAINLESS STEEL TAPPING SLEEVE - FORD OR APPROVED EQUAL

OR APPROVED EQUAL

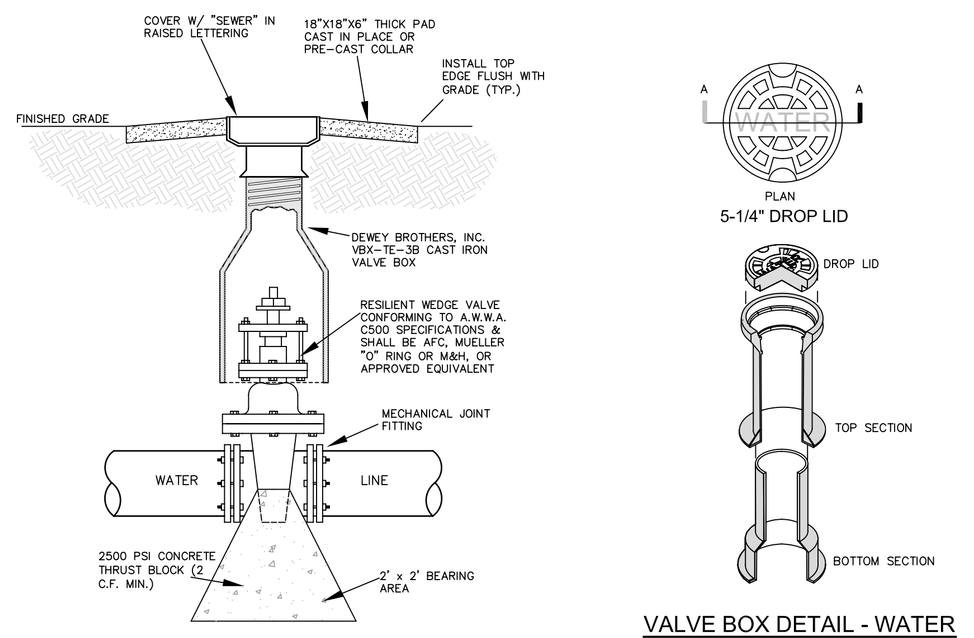

VALVE AND BOX DETAIL

NOT TO SCALE

VALVE BOX DETAIL - WATER

NOT TO SCALE

KILL DEVIL HILLS WATERLINE MATERIAL STANDARDS

PART A. MATERIALS

Section C.1. Generally.

All water system and water line materials used shall conform to the specifications set out in this division and any changes shall be submitted in writing to and approved by the Town.

Section C.2. Pipe standards.

(a) PVC: Except for 2" diameter pipe, PVC pipe shall conform to all requirements of AWWA Specification C900, latest edition, and AWWA C905, latest edition, for sizes larger than 12". PVC pipe and fittings shall be pressure rated at one hundred fifty (150) psi (pounds per square inch) with a standard dimension ratio (SDR) of eighteen (18) for both barrel and bell dimensions. 2" diameter pipe shall comply with ASTN standard D2241, SDR 21. Pipe shall bear the National Sanitation Foundation seal of approval and shall comply with the requirements for Type 1, Grade I (PVC 1120) of the ASTM resin Specification D-1784.
(1) Joints. PVC pipe shall have push-on joints, incorporating a rubber ring bell joint which shall be an integral and homogeneous part of the pipe barrel. Solvent-welded joints shall not be used.
(2) Fittings shall be the same as for ductile iron pipe as set forth below.

(b) Ductile Iron: Ductile Iron Pipe shall be furnished in 18 or 20 foot laying lengths, with push-on type joints, except where mechanical joint or pipe is called for on the Drawings. Ductile iron pipe shall conform to the requirements of AWWA C151. Flanged ductile iron pipe shall comply with the requirements of AWWA C115.
(1) Thickness Class of the pipe shall be Pressure Class 350 as required by the pipe size, bedding type and depth. The pipe shall be round and gaged throughout its entire length. Ungaged pipe will not be accepted.
(2) Lining – All pipe shall be single coat cement lined and sealed coated in accordance with AWWA C104.
(3) Joints shall be either mechanical, push on, or flanged conforming to AWWA C111 (ANSI A21.11) or AWWA C115 (ANSI A21.15) as applicable. All flanges and glands for pipes and fittings shall be made of ductile iron.
(4) Fittings shall be manufactured in accordance with AWWA C110 (ANSI A21.10) or AWWA C153 (ANSI A21.53), and shall be ductile iron. The minimum acceptable pressure rating shall be 350 psi. All fittings shall be lined in the same manner as ductile iron pipe.
(5) Coating shall be provided on the exterior of all ductile iron pipe, joints and fittings as required by AWWA C110, C111, C115, C151, or C153 as applicable. All pipes, joints and fittings shall be examined before and after laying to determine if the coating has been damaged. Any damaged areas and all joints shall be coated with approximately 1 mil of a bituminous coating, such as Koppers No. 50 or Interbol No. 49.
(6) Polyethylene Wrap, where indicated on Drawings, shall conform to the requirements of AWWA C105.
(7) Retainer Glands, or other joint restraint devices, shall be cast from high strength ductile iron. Restraint devices shall be rated to perform their restraining function at the full rated pressure of the pipe itself. Devices used on mechanical joint pipe shall be compatible with mechanical joint connectors meeting requirements of AWWA C111. Acceptable types:
(a) For PVC pipe, Uniflange Series 1300 or EBAA Iron Sales, Inc., Series 500 or 1500;
(b) Ductile Iron Pipe shall include a restraining mechanism which, when actuated, imparts multiple wedging action against the pipe, increasing its resistance as the pressure increases. The gland shall be compatible with mechanical joints meeting the requirements of AWWA C111. Acceptable types shall be Mega-Lug, Series 1100 for mechanical joint pipe and Series 1700 for push-on joint pipe.

MICHAEL W. ROBINSON, P.E., P.L.S.
ENGINEERING AND SURVEYING
P.O. BOX 2852
KILL DEVIL HILLS, NC 27948
PHONE: 252-255-8026
EMAIL: mrobinson@obxengineering.com

NOT FOR CONSTRUCTION PRELIMINARY

NORTH CAROLINA PROFESSIONAL SEAL 18994 ENGINEER MICHAEL W. ROBINSON

REVISIONS

NO.	DATE	DESCRIPTION	BY

PROJECT: FIRST FLIGHT HOTEL, LLC
KILL DEVIL HILLS DARE COUNTY NORTH CAROLINA

DETAIL SHEET 4

DATE: 10-24-16	SCALE: NONE
DESIGNED: MWR	DRAWN: MWR
SHEET: 8 OF 8	
CAD FILE:	
PROJECT NO: 052916	