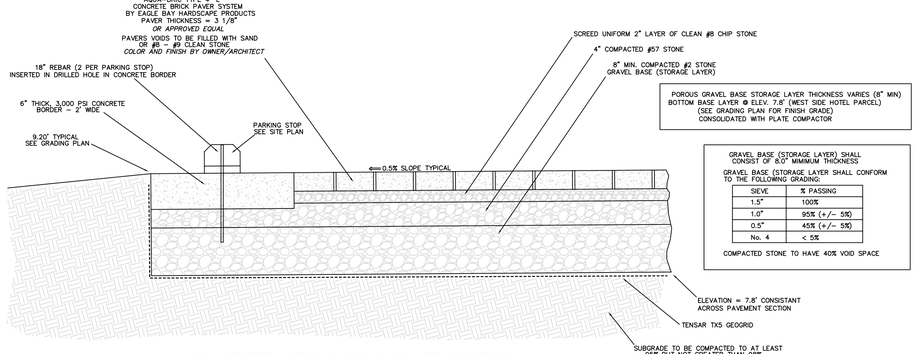

POROUS GRAVEL BASE STORAGE LAYER THICKNESS VARIES (8" MIN)
BOTTOM BASE LAYER @ ELEV. 7.8' (WEST SIDE HOTEL PARCEL)
(SEE GRADING PLAN FOR FINISH GRADE)
CONSOLIDATED WITH PLATE COMPACTOR

GRAVEL BASE (STORAGE LAYER) SHALL CONSIST OF 8.0" MIMMUM THICKNESS

GRAVEL BASE (STORAGE LAYER SHALL CONFORM TO THE FOLLOWING GRADING:

SIEVE	% PASSING
1.5"	100%
1.0"	95% (+/– 5%)
0.5"	45% (+/– 5%)
No. 4	< 5%

COMPACTED STONE TO HAVE 40% VOID SPACE

CONCRETE INTERLOCKING PAVER SECTION

NOT TO SCALE

THIS DETAIL SUPERSEDES THE PAVEMENT DETAIL SHOWN ON GRADING PLAN SW4

THIS PAVING SECTION HAS RESULTED FROM IMPUT FROM EAGLE BAY USA, SWMPAVE, GET SOLUTIONS AND THE ENGINEER.

THE PAVING SECTION NOTED APPLIES ONLY TO THE AQUA BRIC PAVERS NOTED ON THE DETAIL

OTHER PAVER MANUFACTURERS MAY BE CONSIDERED BUT IT WILL BE THE RESPONSIBILITY OF THE PAVER MANUFACTURER TO PREPARE THEIR OWN PAVER SECTION WITH BASE SPECIFICATIONS FOR REVIEW BY GET SOLUTIONS AND THE ENGINEER.

THIS INSTALLATION WILL REQUIRE INSPECTIONS AND TESTING BY GET SOLUTIONS INCLUDING BUT NOT LIMITED TO SOIL PREPARATION, GRAVEL SIEVE TESTING AND GRAVEL LAYER COMPACTION. A REQUIRED PRE-CONSTRUCTION MEETING WILL BE HELD PRIOR TO BEGINNING INSTALLATION WITH ATTENDANCE BY THE CONTRACTOR, GET SOLUTIONS, OWNER AND ENGINEER.

UNIT PAVERS:

1. Manufacturer: Eagle Bay USA, 1231 Willis Road, Richmond, Virginia 23237
   a. Name: Bob Bridges
   b. Phone: 540–494–7336
   c. Fax: 804–743–4392
   d. Website: www.swmpave.com
2. Type: Aqua Bric Type 4 "L" Joint/Void System
   a. Material Standard: Comply with ASTM C 936.
   b. Size: "L" Shape, with a 250 mm (9.84") x 125 mm (4.92") plan area on both legs, and an 80mm (3.15") thickness, not considering chamfers and joint details.
   c. Color and finishes: To be selected by the Owner prior to the work.
   d. Pigment Standard: Comply with ASTM C 979.
   e. Type: Joint/Void System
3. Optional Finishes
   a. Permavision Face Mix – BY ARCHITECT,OWNER
   b. Body Standard Finish – BY ARCHITECT/OWNER
4. Quality Assurance
   a. All unit pavers shall comply with the following material requirements:
      i. Unit Pavers: Conform to ASTM C 936.
      ii. Color(s): Selected from a standard range of colors and/or natural gray.
      iii. Mold Life: No paver shall be used for this project which has been manufactured in a mold that exceeds the mold life specified in the Method Statement.
      iv. Visual Inspection: All units shall be sound and free of defects that would interfere with the proper placing of the unit or impair the strength or permanence of the construction. Minor cracks incidental to the usual methods of manufacture, or minor chipping resulting from customary methods of handling in shipment, delivery and installation, shall not be deemed grounds for rejection.
      v. ADA Compliance: Joint widths shall not exceed 13 millimeters and all unit paver installations shall comply fully with the Americans with Disabilities Act Accessibility Guidelines (ADAAG) upon installation.

Unit Pavers Manufacturer Pre-Qualification Statement:

a. Manufacturer shall demonstrate that they have a minimum of 5 years' successful experience in the manufacture of interlocking concrete block pavers, and that they have supplied permeable unit pavers for at least three (3) completed projects of a similar nature, with regard to installation and production capacity required for the project.
b. Manufacturer shall provide a separate reference for each completed project for review. For each reference, provide Owner, Client, and Contractor company names, point of contact, postal address, phone, fax, and e-mail address.
c. References shall be required to demonstrate that the Manufacturer has a proven record of sufficient production capacity and established quality control procedures to produce, store, and deliver the required number of unit pavers with the quality specified within the required time frame.

Installer Pre-Qualification Statement:

Owner will require an experienced paver installer for the project, meeting the following requirements for approval.

1. Provide at least three (3) job references in writing from projects of a similar size and complexity. For each reference, provide Owner, Client, and Contractor company names, point of contact, postal address, phone, fax, and e-mail address.
2. References shall be required to demonstrate that the installer has suitably experienced personnel and a management capability sufficient to execute the work.
3. Designate and provide a job foreman on the project available at all times during the work with at least five (5) years of relevant experience, and holding a current certificate from the ICPI Concrete Paver Installer Certification program and a record of completion from the PICP Specialist Course

Refer to Report of Subsurface Investigation and Geotechnical Conditions report perpared GET Solutions Inc. for specific site filling and preparation requirements.
Report is dated August 12, 2016, GET Project Number EC16-206G

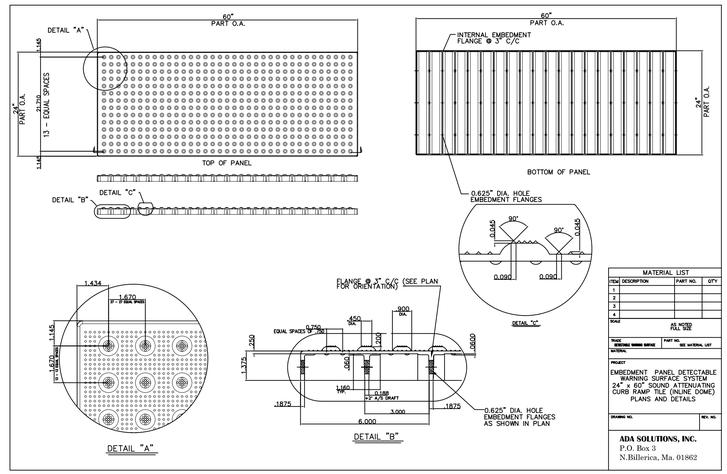

DETECTABLE PAVER PANELS - ADA SOLUTIONS, INC. or EQUAL

NOT TO SCALE

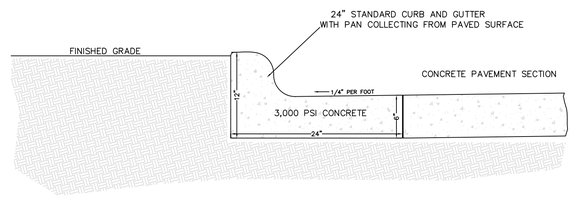

CONTRACTION JOINTS SHALL BE PLACED AT 10' INTERVALS.
ALL CONTRACTION JOINTS SHALL BE FILLED WITH JOINT FILLER AND SEALER.

CURB AND GUTTER PAVING SECTION

NOT TO SCALE

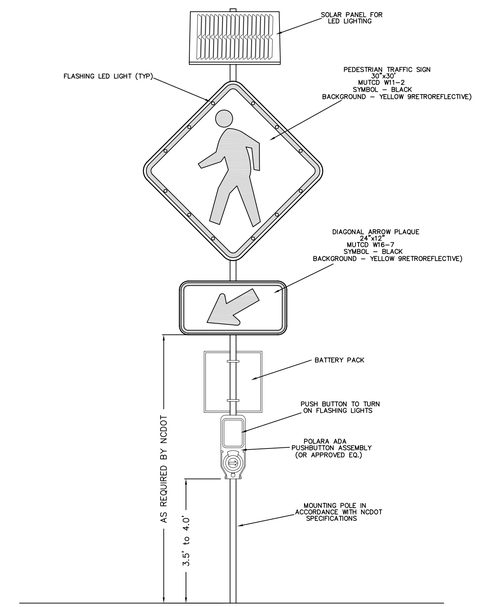

PEDESTRIAN CROSSING SIGN WITH LED LIGHTING

NOT TO SCALE

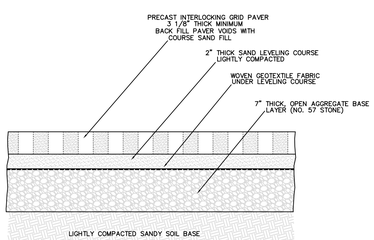

SWIMMING POOL TURFSTONE/PICP PAVING DETAIL

NOT TO SCALE

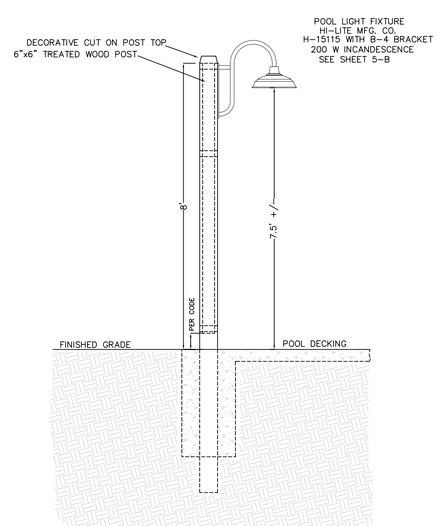

SWIMMING POOL FENCING DETAIL SIDE VIEW WITH LIGHING

NOT TO SCALE

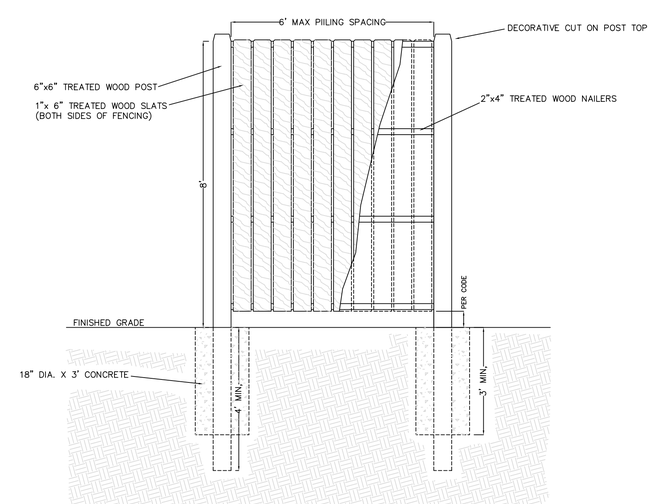

SWIMMING POOL FENCING DETAIL

NOT TO SCALE

MICHAEL W. ROBINSON, P.E., P.L.S.
ENGINEERING AND SURVEYING
P.O. BOX 2852
KILL DEVIL HILLS, NC 27948
PHONE: 252-255-8026
EMAIL: mrobinson@obxengineering.com

PRELIMINARY REVIEW
OCEANFRONT AMENITY REVISIONS

NORTH CAROLINA PROFESSIONAL ENGINEER SEAL – 04-05-19 – M. W. ROBINSON

REVISIONS

NO.	DATE	DESCRIPTION	BY

PROJECT:
FIRST FLIGHT HOTEL, LLC
KILL DEVIL HILLS — DARE COUNTY — NORTH CAROLINA

GENERAL DETAILS

DATE: 04-05-19	SCALE: NONE
DESIGNED: MWR	DRAWN: MWR

SHEET: 7 OF 8

CAD FILE:

PROJECT NO: 052916